polysan

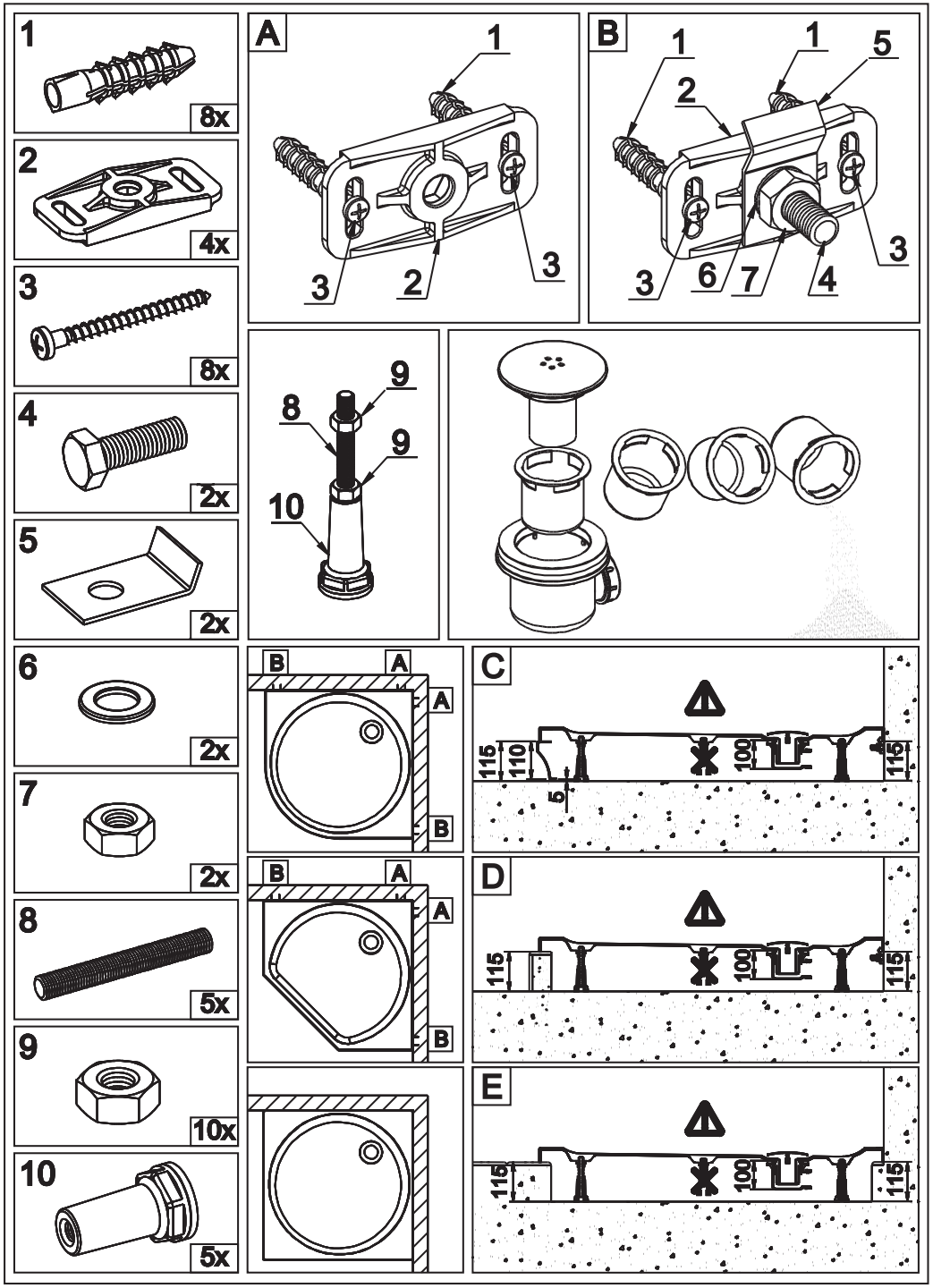
1
8x
2
4x
3
8x
4
2x
5
2x
6
2x
7
2x
8
5x
9
10x
10
5x
A
1
3
2
3
B
1
2
1
5
3
6
7
4
3
8
9
9
10
B
A
A
B
C
115
110
5
100
115
B
A
A
B
D
115
100
115
E
115
100
115

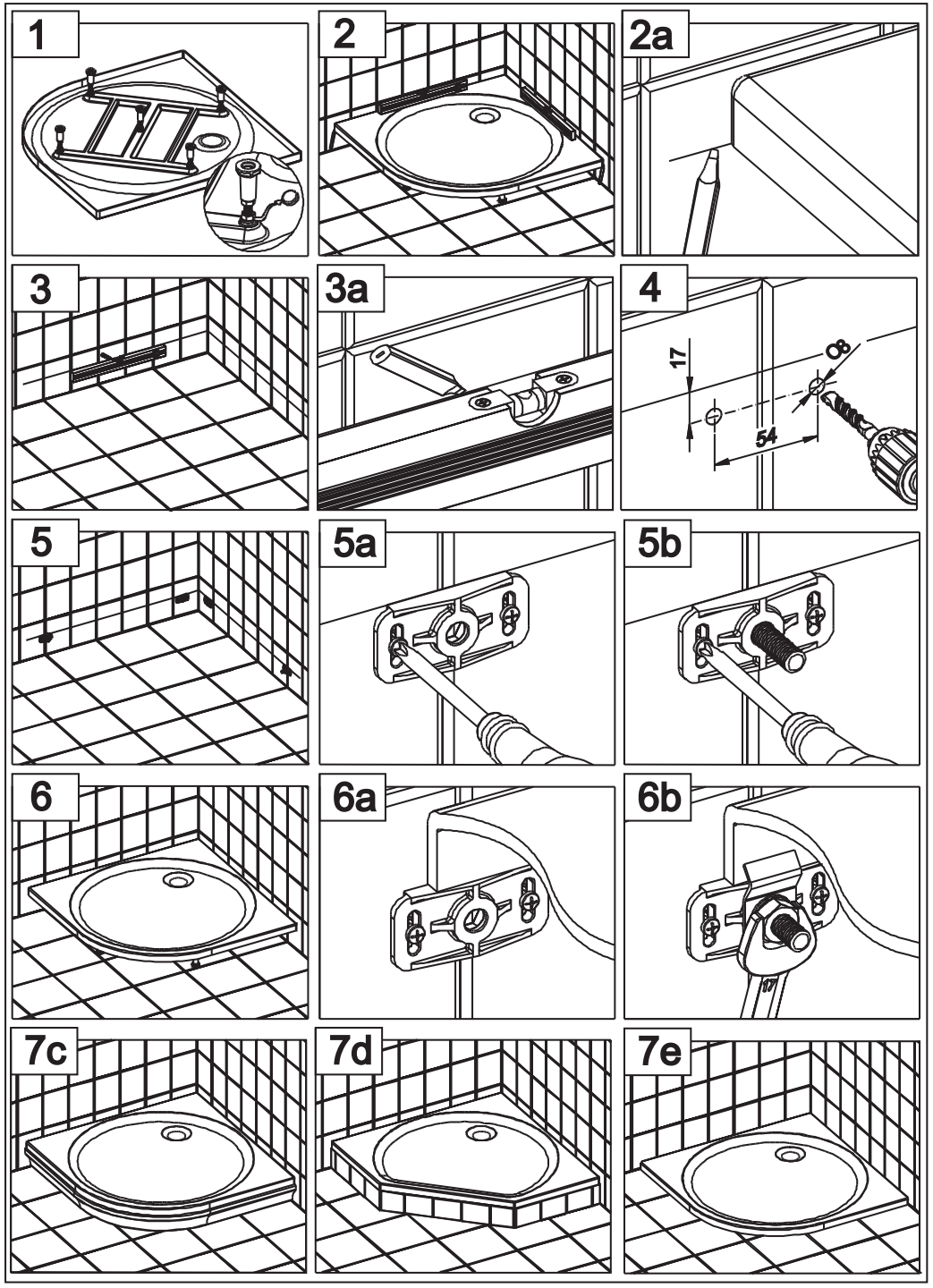
1
2
2a
3
3a
4
17
Ø8
54
5
5a
5b
6
6a
6b
7c
7d
7e